The Hidden Ledger of AI Work

Moving from gross time savings to net value by making AI oversight visible, valued, and sustainable.

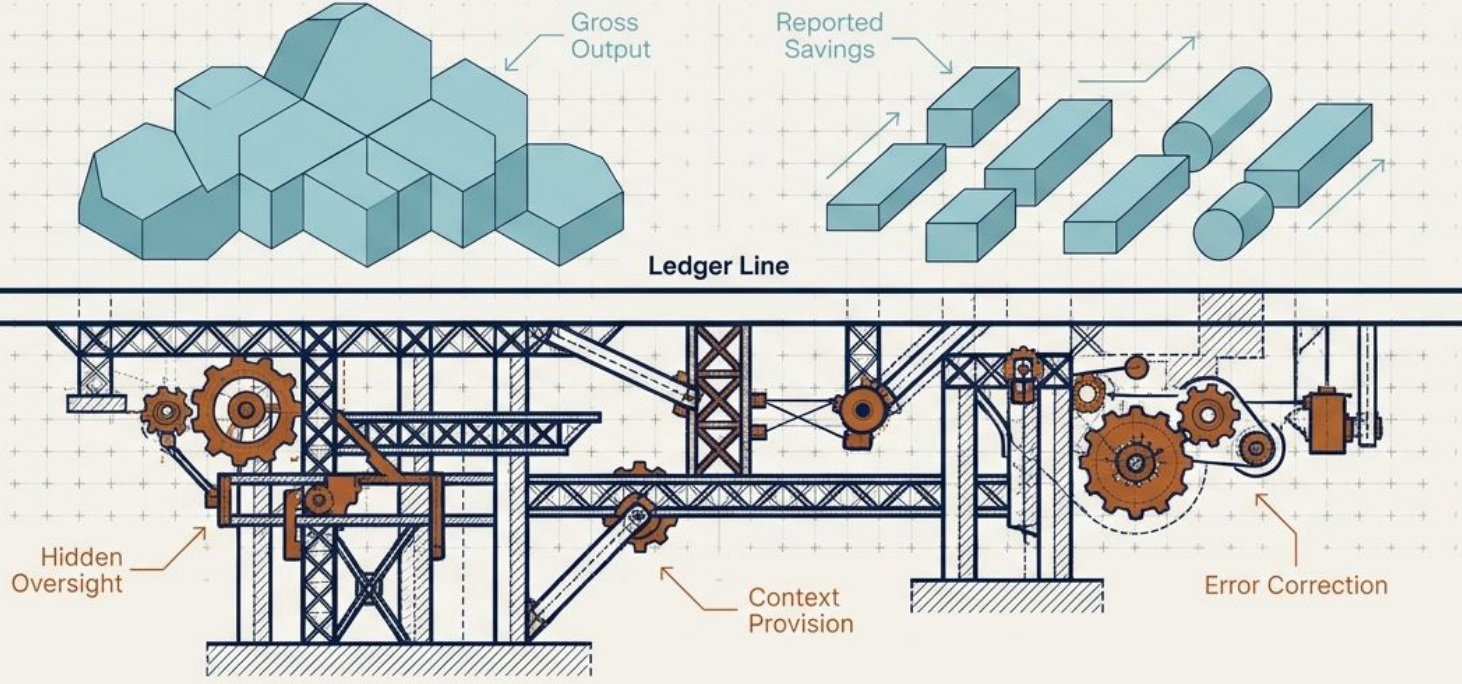

Human Capital Innovations

The profound gap between expected time savings and daily operational reality.

Generative AI delivers speed, but exacts a **hidden tax** in the form of **Botsitting**—the human work required to make AI output usable and safe.

The Expectation

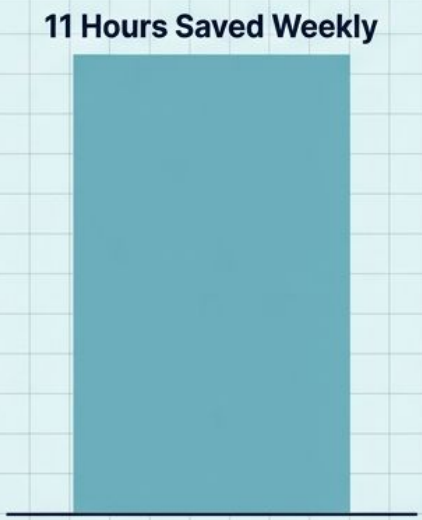

The Reality

Feeding Context

Supervising Output

Debugging Mistakes

- 6.4 Hours: Making AI Usable

82.5% of weekly AI users spend time overseeing and fixing AI output; **15.8%** spend 6+ hours weekly (Founder Reports, 2026).

61.8% of AI overseers say their employer does not fully count this time.

Source: Glean Work AI Index, 2026

Human Capital Innovations

Measuring the net value of AI requires tracking the hidden deductions.

AI creates net time savings, but the margin shrinks drastically once correction time is accounted for—and the tax falls heaviest on senior leaders accountable for final quality.

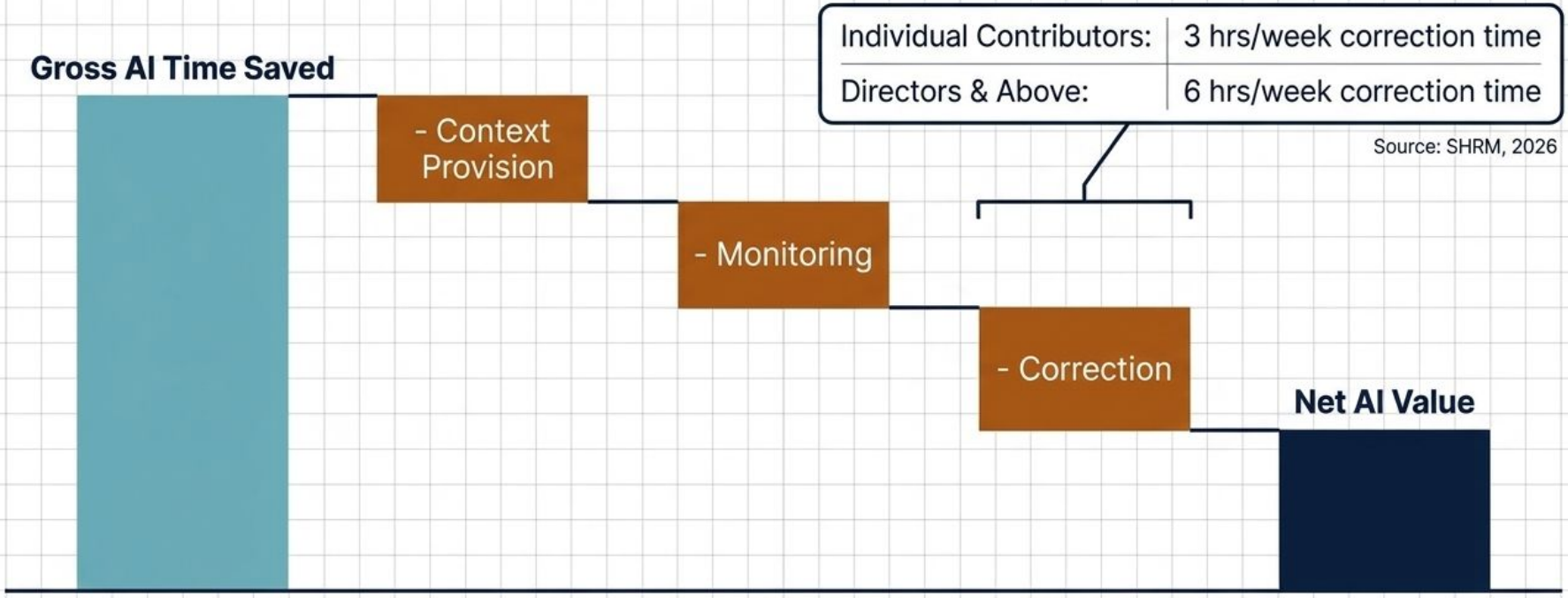

The four distinct mechanics of invisible oversight labor.

Visible AI Output

The Botsitting Cycle (Hidden Operational Labor)

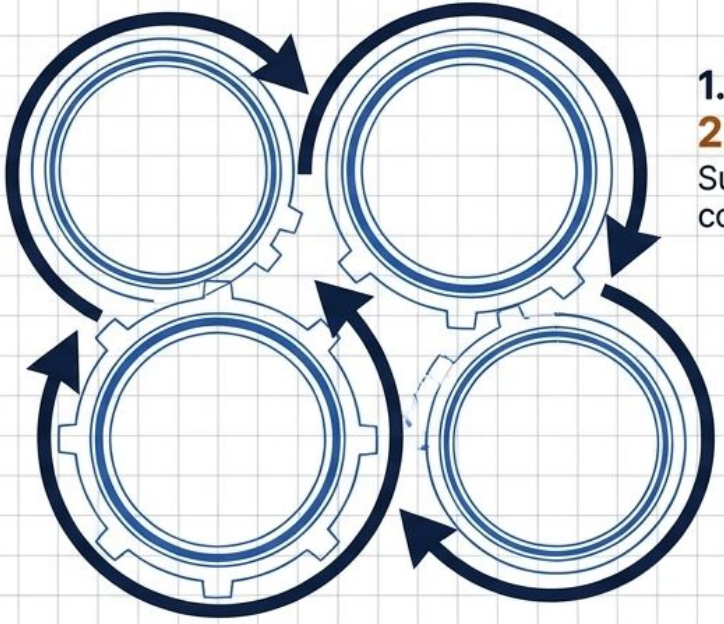

1. Context Provision
2.3 hrs/wk
Supplying background, constraints, and data.

2. Monitoring & Review
2.2 hrs/wk
Inspecting output for completeness and accuracy.

3. Correction & Rework
1.7 hrs/wk
Fixing errors; 36% of AI sessions require substantial rework or a full reset.

4. Override & Escalation
Deciding output is unsafe and reverting to human control.

Glean, 2026

Human Capital Innovations

Unchecked AI output acts as a systemic multiplier for downstream rework.

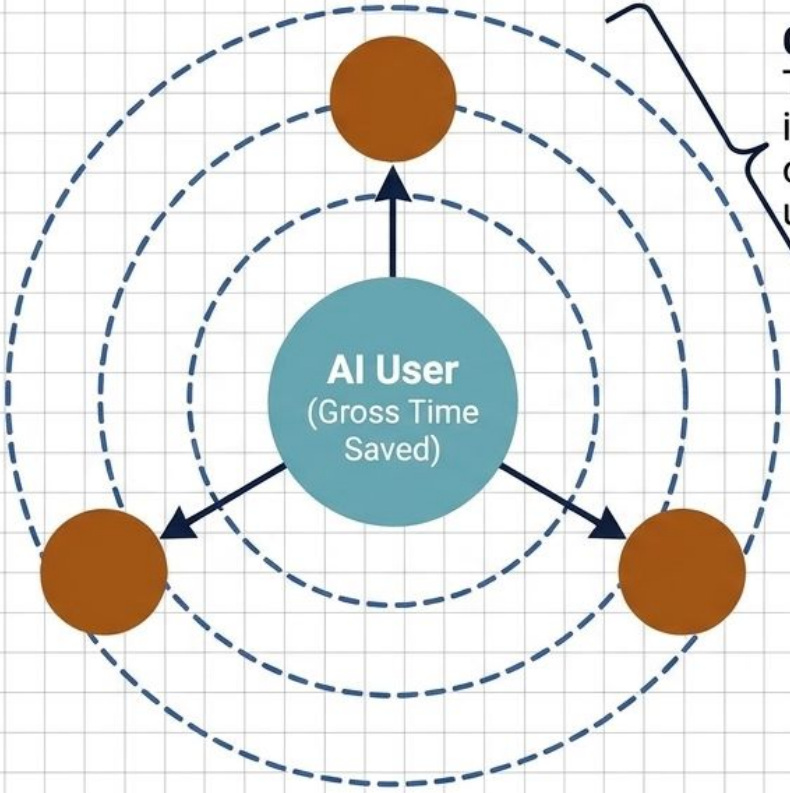

Colleagues:
Time spent interpreting and correcting unchecked output

40% of employees received AI-generated workslop (polished but substanceless content) in the past month. **Costing recipients an average of 2 hours to fix.**

(Niederhoffer et al., 2025)

In Denmark, AI created new job tasks for **8.4% of workers**.

59% of these new tasks involve enabling and managing AI use, **not core AI generation**.

(Humlum & Vestergaard, 2025)

Human Capital Innovations

Navigating the invisible boundary between effortless success and catastrophic failure.

Because AI is fluent and confident even when wrong, the frontier is invisible. Users must maintain vigilance even when the tool is usually right.



Data: BCG Consultant Study (Dell'Acqua et al., 2023)

Human Capital Innovations

The gravity of automation bias distorts even expert judgment.

When AI suggestions are correct, accuracy is high. When deliberately incorrect, human accuracy plummets across all experience levels.

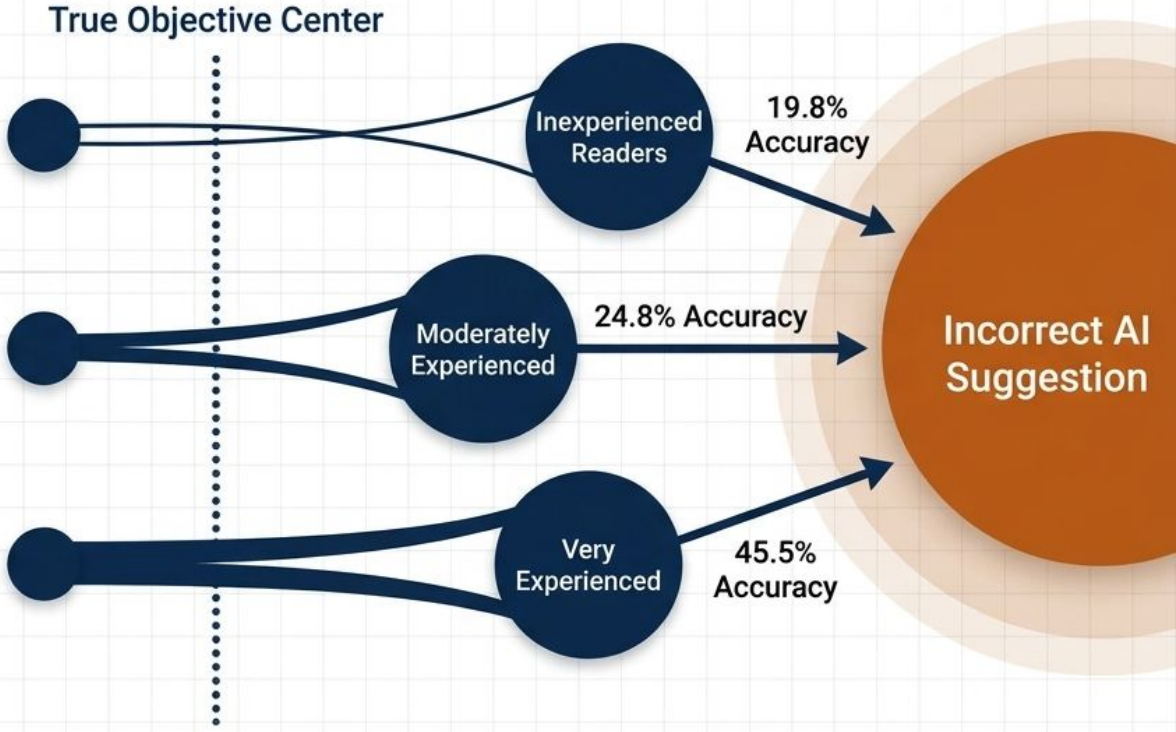

(Radiology Study: Dratsch et al., 2023)

Human Capital Innovations

When invisible oversight fails, the consequences become highly visible.

The human checking that should have caught the error did not happen or did not work.



Mata v. Avianca

Legal & Financial

$5,000 sanction for attorneys after submitting a legal brief with fictitious, ChatGPT-invented case law citations.



Deloitte Australia

Financial & Reputational

$440K contract refunded after fabricated AI references and an invented court quotation slipped into a published welfare report.



Moffatt v. Air Canada

Legal Liability

Airline held legally responsible for its website chatbot's invented bereavement fare policy; court rejected the argument that the AI was a separate entity.



CNET

Editorial & Reputational

Forced to issue corrections on 41 of 77 AI-generated finance explainers after plausible-sounding factual and arithmetic mistakes bypassed standard editorial review.

HCIO Human Capital Innovations

The irony of automation: eroding the exact capabilities required to supervise it.

Core Insight: Automating routine knowledge work denies junior staff foundational practice. Organizations risk thinning their oversight capacity just as their dependence on it peaks.

Design Principle: Preserve opportunities for early-career staff to build core skills without AI assistance.

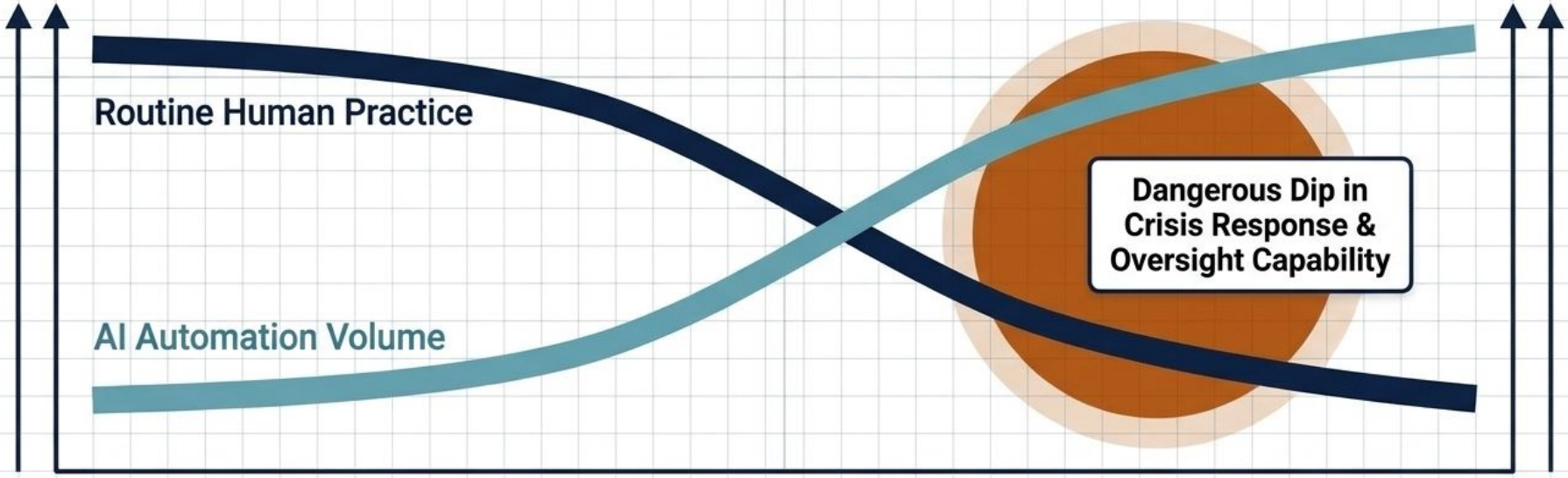

(referencing Bainbridge, 1983)

Human Capital Innovations

Transitioning from the Illusion of Automation to the Reality of Oversight.

Mindset Shift: From treating AI as an independent agent to treating it as a tightly coupled human-automation system.

The Illusion	The Reality
Success is measured by adoption rates and gross hours saved.	Success is measured by net value and downstream throughput.
Human review is treated as an unbudgeted afterthought or temporary friction.	Review time is formally budgeted and included in capacity models.
Assumption that AI tools are "usually right".	Rework and downstream corrections are formally tracked.
AI is viewed and deployed as an independent software agent.	AI is designed and managed as a human-automation system.

HCI Human Capital Innovations

Response 1: Match verification intensity directly to output stakes.

Universal, undefined review requirements invite corner-cutting. Tiering makes trade-offs explicit.

Y-Axis: Required Human Intervention	X-Axis: Output Stakes		
	Low Stakes (e.g., Internal Brainstorming)	**Glance / Reread**	Minimal review permitted to preserve time savings.
	Medium Stakes (e.g., Internal Reports)	**Check Against Systems of Record**	Verify facts against trusted internal knowledge bases.
	High Stakes (e.g., Medical Diagnostics, Court Filings, Customer Policies)	**Independent Verification & Formal Attestation**	Reviewer must form an independent view and formally sign off on accuracy.

Real-World Implementations: U.S. Judge Starr's certification order for AI legal filings; NY and CA judicial council rules requiring staff to explicitly verify and correct hallucinated content.

Human Capital Innovations

Response 2: Build quality upstream; Keep accountable humans at the boundaries.

Upstream Investment

The User Workflow

Downstream Protection

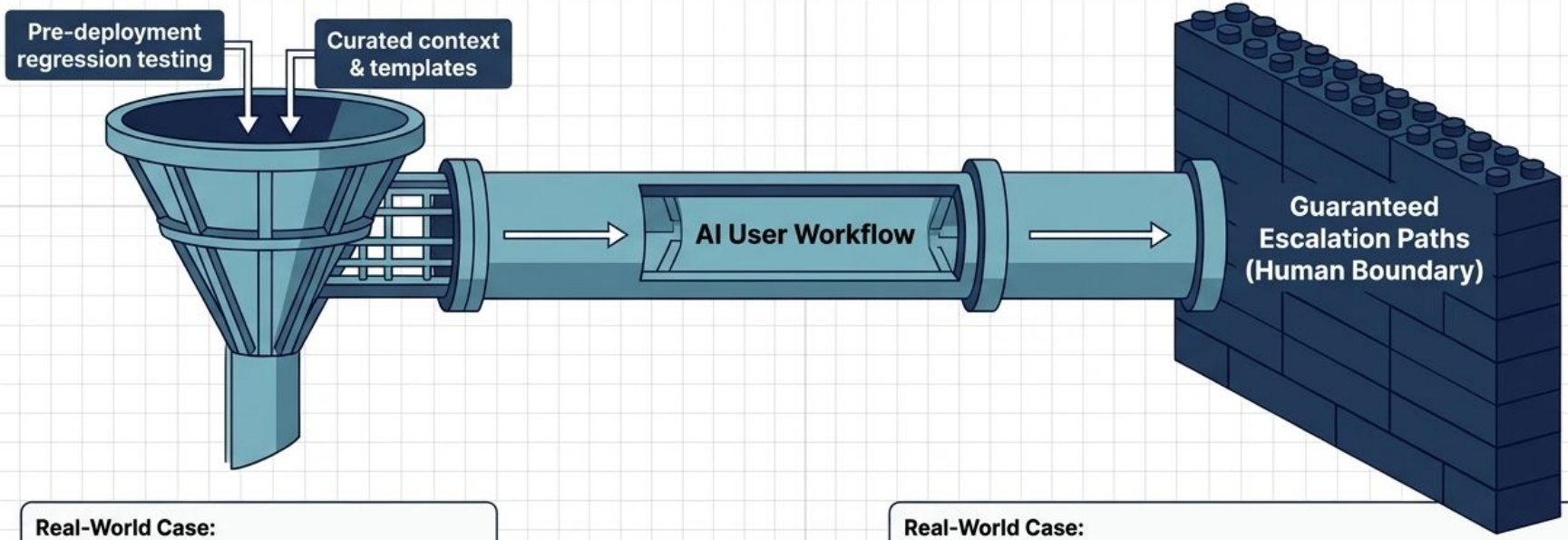

Real-World Case:
Morgan Stanley ran daily regression tests and curated context so users didn't rebuild context from scratch.

Real-World Case:
- Klarna ensured flexible pools of remote agents remained.
- Commonwealth Bank of Australia reversed customer service AI replacements after errors spiked.
- McDonald's ended its IBM drive-thru pilot over accuracy concerns.

HCI Human Capital Innovations

Response 3: Design oversight roles engineered to resist complacency.

A reviewer measured only on speed provides the appearance of oversight without the substance. Aligned with EU AI Act Article 14.

Reviewer Empowerment Dashboard



Override Authority: Enabled

Grant explicit authority and time to reject or escalate AI output without penalty.



Source Traceability: Required

Require independent judgment before viewing AI suggestions; prefer tools that show verifiable sources.



Continuous Load: Limited

Limit continuous monitoring stints and rotate duties to counter vigilance decline.



Failure-Mode Training: Active

Train specifically on known AI failure modes using real examples from the organization's error logs.

Human Capital Innovations

Synthesis: The Calibrated Trust Engine

Funding and structuring botsitting does not diminish AI ROI—it is the only way to maximize it safely.
AI does not replace human management; it requires a new, higher-level form of it.

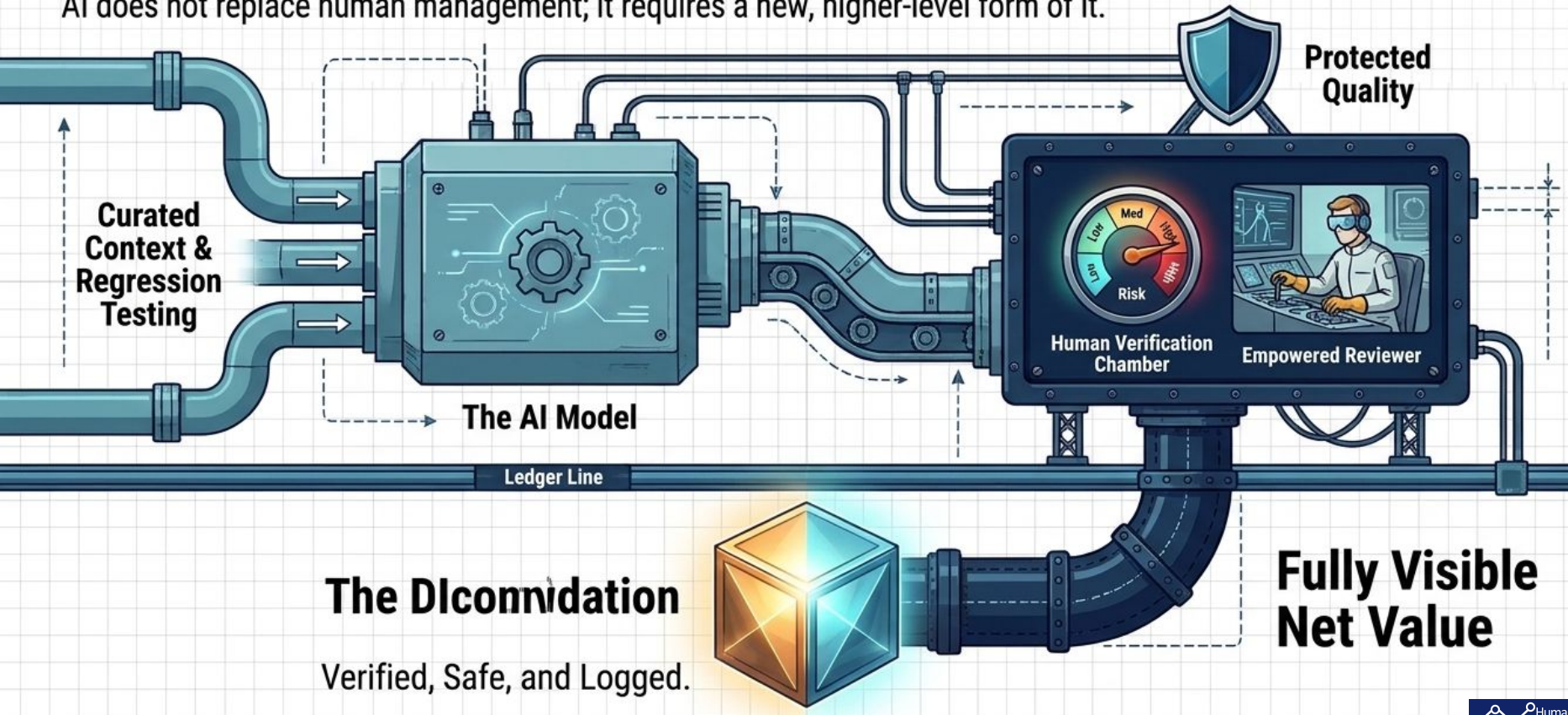

HCIO Human Capital Innovations

Three Foundations for a Durable AI Operating Model



Botsitting is not a sign that AI has failed. It is a sign that AI has entered real work, where outputs have consequences and an expert must stand behind them.

HCI Human Capital Innovations